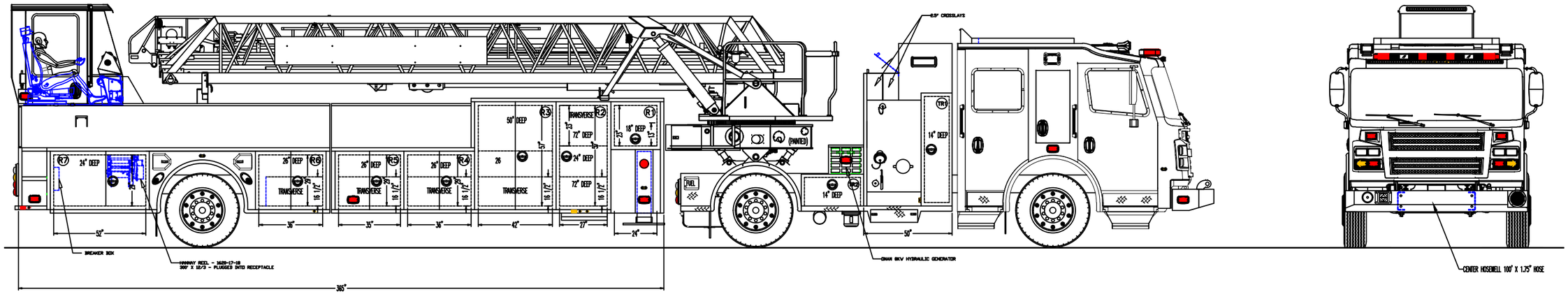

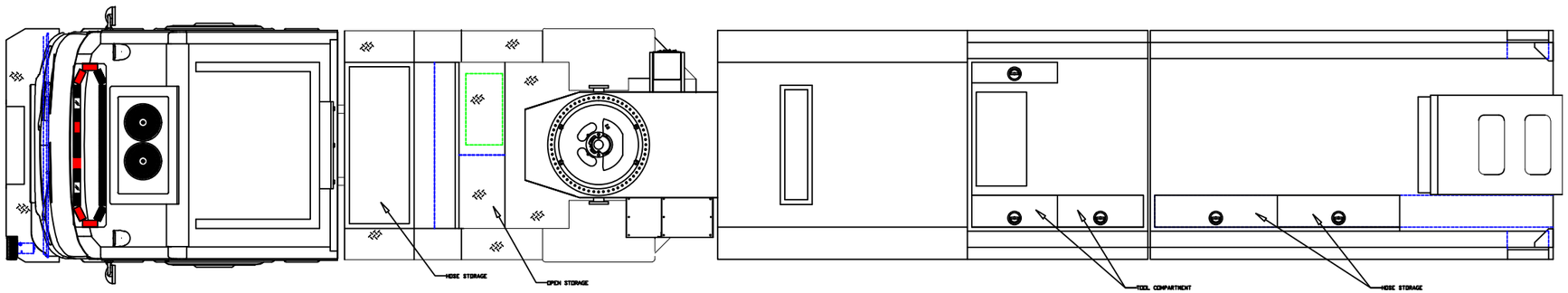

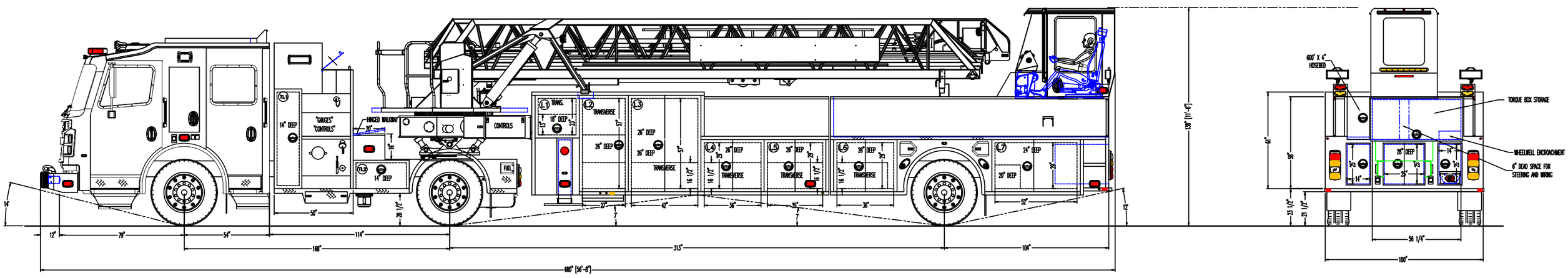

NOTES:
1. OVERALL HEIGHT IS IN LOADED CONDITION. UNLOADED HEIGHTS MAY BE 4" ABOVE HEIGHTS SHOWN.
2. DO NOT SCALE DRAWING.
3. ALL DIMENSIONS ARE APPROXIMATE AND SUBJECT TO ENGINEERING CHANGES.
4. DRAWING MAY OR MAY NOT SHOW ALL ITEMS AS DESCRIBED IN THE WRITTEN DETAIL SPECIFICATIONS.
5. INCLUSION OF AN ITEM ON THE DRAWING DOES NOT CONSTITUTE INCLUSION OF THAT ITEM WITH THE FINAL DELIVERED UNIT.

REVISED: -	DATE: -
REVISED: -	DATE: -
REVISED: ATG	DATE: 04-11-2023 (R-02)
DRAWN: ATG	DATE: 04-11-2023 (8289-10)

PROPRIETARY AND CONFIDENTIAL
THE INFORMATION CONTAINED IN THIS DRAWING IS THE SOLE PROPERTY OF ROSENBAUER. ANY REPRODUCTION IN PART OR AS A WHOLE WITHOUT THE WRITTEN PERMISSION OF ROSENBAUER IS PROHIBITED.

APPROVED BY:

MAXIMUM HEIGHT	11'6"
MAXIMUM LENGTH	56'8"
BODY WIDTH	100"

CHASSIS: ROSENBAUER R5408
PUMP: WATEROUS S100C20 2000 GPM
TANK: –
TYPE: TILLER
AERIAL: 100' TDA

STOCK TDA

rosenbauer

ROSENBAUER EXT

JOB NUMBERS	DRAWING NUMBER	REV
75341	D00048	02